UNIVERSITY OF CAMBRIDGE INTERNATIONAL EXAMINATIONS
General Certificate of Education
Advanced Subsidiary Level and Advanced Level

CANDIDATE NAME									
CENTRE NUMBER						CANDIDATE NUMBER				

1518908486

PHYSICS **9702/02**

Paper 2 AS Structured Questions **October/November 2008**

1 hour

Candidates answer on the Question Paper.

No Additional Materials are required.

READ THESE INSTRUCTIONS FIRST

Write your Centre number, candidate number and name on all the work you hand in.
Write in dark blue or black pen.
You may use a soft pencil for any diagrams, graphs or rough working.
Do not use staples, paper clips, highlighters, glue or correction fluid.
DO **NOT** WRITE IN ANY BARCODES.

Answer **all** questions.
You may lose marks if you do not show your working or if you do not use appropriate units.

At the end of the examination, fasten all your work securely together.
The number of marks is given in brackets [ ] at the end of each question or part question.

For Examiner's Use	
1	
2	
3	
4	
5	
6	
7	
8	
Total	

This document consists of **16** printed pages and **4** blank pages.

© UCLES 2008

Data

speed of light in free space,	$c = 3.00 \times 10^{8}\ \text{m s}^{-1}$
permeability of free space,	$\mu_0 = 4\pi \times 10^{-7}\ \text{H m}^{-1}$
permittivity of free space,	$\varepsilon_0 = 8.85 \times 10^{-12}\ \text{F m}^{-1}$
elementary charge,	$e = 1.60 \times 10^{-19}\ \text{C}$
the Planck constant,	$h = 6.63 \times 10^{-34}\ \text{J s}$
unified atomic mass constant,	$u = 1.66 \times 10^{-27}\ \text{kg}$
rest mass of electron,	$m_e = 9.11 \times 10^{-31}\ \text{kg}$
rest mass of proton,	$m_p = 1.67 \times 10^{-27}\ \text{kg}$
molar gas constant,	$R = 8.31\ \text{J K}^{-1}\ \text{mol}^{-1}$
the Avogadro constant,	$N_A = 6.02 \times 10^{23}\ \text{mol}^{-1}$
the Boltzmann constant,	$k = 1.38 \times 10^{-23}\ \text{J K}^{-1}$
gravitational constant,	$G = 6.67 \times 10^{-11}\ \text{N m}^2\ \text{kg}^{-2}$
acceleration of free fall,	$g = 9.81\ \text{m s}^{-2}$

© UCLES 2008

Formulae

uniformly accelerated motion, $s = ut + \frac{1}{2}at^2$
$v^2 = u^2 + 2as$

work done on/by a gas, $W = p\Delta V$

gravitational potential, $\phi = -\frac{Gm}{r}$

hydrostatic pressure, $p = \rho gh$

pressure of an ideal gas, $p = \frac{1}{3}\frac{Nm}{V}\langle c^2 \rangle$

simple harmonic motion, $a = -\omega^2 x$

velocity of particle in s.h.m., $v = v_0 \cos \omega t$
$v = \pm \omega \sqrt{(x_0^2 - x^2)}$

electric potential, $V = \frac{Q}{4\pi\varepsilon_0 r}$

capacitors in series, $1/C = 1/C_1 + 1/C_2 + \ldots$

capacitors in parallel, $C = C_1 + C_2 + \ldots$

energy of charged capacitor, $W = \frac{1}{2}QV$

resistors in series, $R = R_1 + R_2 + \ldots$

resistors in parallel, $1/R = 1/R_1 + 1/R_2 + \ldots$

alternating current/voltage, $x = x_0 \sin \omega t$

radioactive decay, $x = x_0 \exp(-\lambda t)$

decay constant, $\lambda = \frac{0.693}{t_{\frac{1}{2}}}$

© UCLES 2008

BLANK PAGE

Answer **all** the questions in the spaces provided.

1 **(a)** The current in a wire is I. Charge Q passes one point in the wire in time t. State

(i) the relation between I, Q and t,

..... [1]

(ii) which of the quantities I, Q and t are base quantities.

.....

..... [2]

(b) The current in the wire is due to electrons, each with charge q, that move with speed v along the wire. There are n of these electrons per unit volume.
For a wire having a cross-sectional area S, the current I is given by the equation

$$I = nSqv^k,$$

where k is a constant.

(i) State the units of I, n, S, q and v in terms of the base units.

I .....

n .....

S .....

q .....

v .....
[3]

(ii) By considering the homogeneity of the equation, determine the value of k.

k = ... [2]

2 A car is travelling along a straight road at speed v. A hazard suddenly appears in front of the car. In the time interval between the hazard appearing and the brakes on the car coming into operation, the car moves forward a distance of 29.3 m. With the brakes applied, the front wheels of the car leave skid marks on the road that are 12.8 m long, as illustrated in Fig. 2.1.

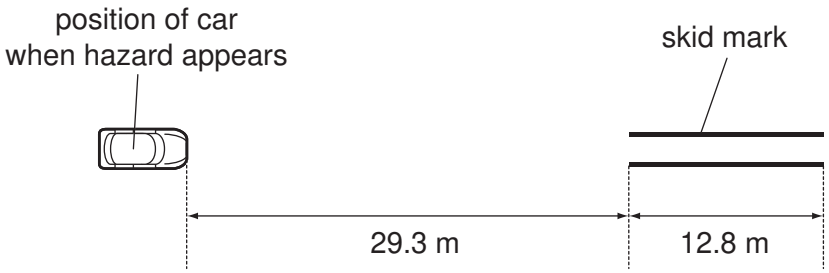

Fig. 2.1

It is estimated that, during the skid, the magnitude of the deceleration of the car is 0.85g, where g is the acceleration of free fall.

(a) Determine

(i) the speed v of the car before the brakes are applied,

v = ... $m s^{-1}$ [2]

(ii) the time interval between the hazard appearing and the brakes being applied.

time = ... s [2]

© UCLES 2008

(b) The legal speed limit on the road is 60 km per hour.
Use both of your answers in **(a)** to comment on the standard of the driving of the car.

.....

.....

.....

..... [3]

3 **(a)** Distinguish between the moment of a force and the torque of a couple.

moment of a force .....

.....

.....

torque of a couple .....

.....

.....

[4]

(b) One type of weighing machine, known as a steelyard, is illustrated in Fig. 3.1.

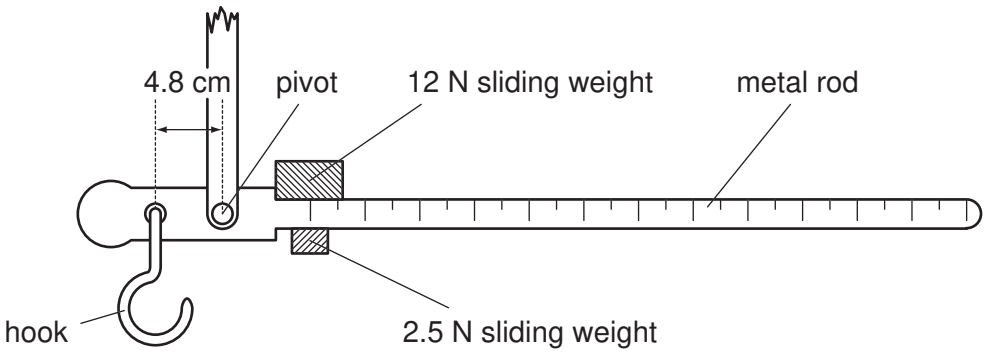

Fig. 3.1

The two sliding weights can be moved independently along the rod.

With no load on the hook and the sliding weights at the zero mark on the metal rod, the metal rod is horizontal. The hook is 4.8 cm from the pivot.

A sack of flour is suspended from the hook. In order to return the metal rod to the horizontal position, the 12 N sliding weight is moved 84 cm along the rod and the 2.5 N weight is moved 72 cm.

© UCLES 2008

(i) Calculate the weight of the sack of flour.

weight = ……N [2]

(ii) Suggest why this steelyard would be imprecise when weighing objects with a weight of about 25 N.

.....

.....[1]

4 Two parallel plates P and Q are separated by a distance of 7.6 mm in a vacuum. There is a potential difference of 250 V between the plates, as illustrated in Fig. 4.1.

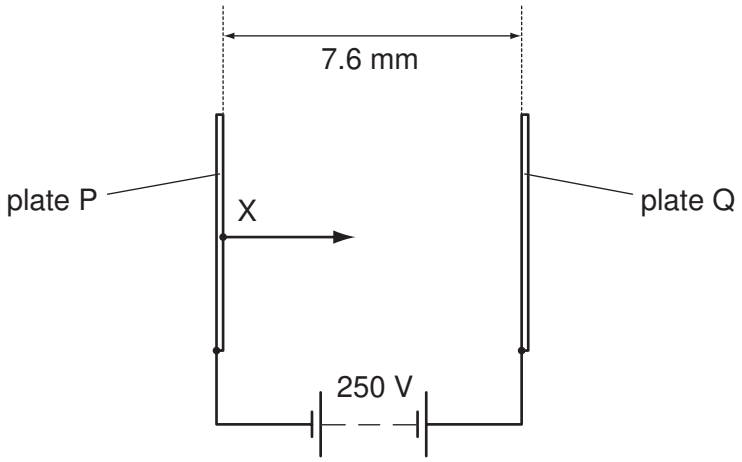

Fig. 4.1

Electrons are produced at X on plate P. These electrons accelerate from rest and travel to plate Q.
The electric field between the plates may be assumed to be uniform.

(a) (i) Determine the force on an electron due to the electric field.

force = …….. N [3]

(ii) Show that the change in kinetic energy of an electron as it moves from plate P to plate Q is 4.0×10^{-17} J.

[2]

© UCLES 2008

(iii) Determine the speed of an electron as it reaches plate Q.

speed = ...m s^{-1} [2]

(b) The positions of the plates are adjusted so that the electric field between them is not uniform. The potential difference remains unchanged.
State and explain the effect, if any, of this adjustment on the speed of an electron as it reaches plate Q.

.....

.....

.....

..... [3]

5 Some smoke particles are viewed through a microscope, as illustrated in Fig. 5.1.

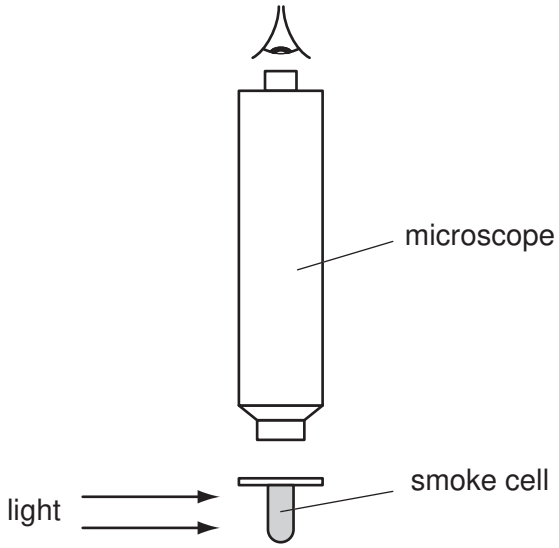

Fig. 5.1

Brownian motion is observed.

(a) Explain what is meant by *Brownian motion.*

.....

.....

..... [2]

(b) Suggest and explain why Brownian motion provides evidence for the movement of molecules as assumed in the kinetic theory of gases.

.....

.....

.....

..... [2]

(c) Smoke from a poorly maintained engine contains large particles of soot.
Suggest why the Brownian motion of such large particles is undetectable.

.....

.....

..... [2]

© UCLES 2008

6 **(a)** Explain what is meant by the *diffraction* of a wave.

.....

.....

..... [2]

(b) **(i)** Outline briefly an experiment that may be used to demonstrate diffraction of a transverse wave.

.....

.....

..... [3]

(ii) Suggest how your experiment in **(i)** may be changed to demonstrate the diffraction of a longitudinal wave.

.....

.....

..... [3]

7 A potential divider circuit consists of two resistors of resistances P and Q, as shown in Fig. 7.1.

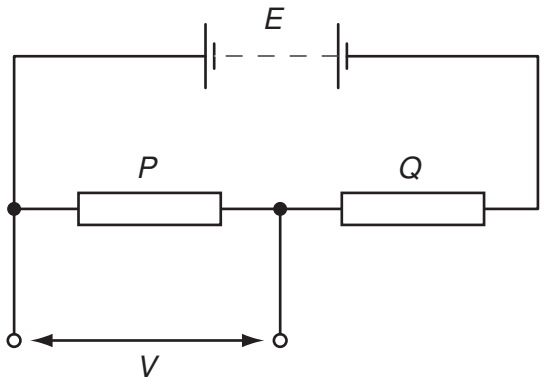

Fig. 7.1

The battery has e.m.f. E and negligible internal resistance.

(a) Deduce that the potential difference V across the resistor of resistance P is given by the expression

$$V = \frac{P}{P + Q} E.$$

[2]

(b) The resistances *P* and *Q* are 2000 Ω and 5000 Ω respectively.
A voltmeter is connected in parallel with the 2000 Ω resistor and a thermistor is connected in parallel with the 5000 Ω resistor, as shown in Fig. 7.2.

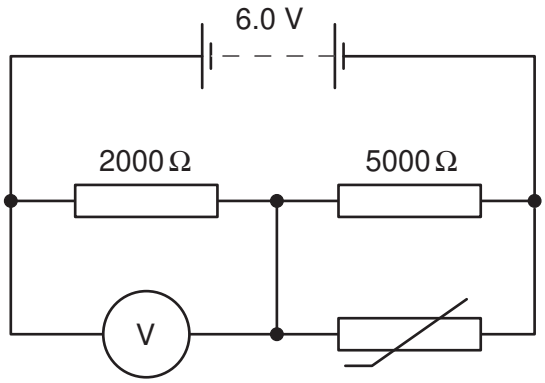

Fig. 7.2

The battery has e.m.f. 6.0 V. The voltmeter has infinite resistance.

(i) State and explain qualitatively the change in the reading of the voltmeter as the temperature of the thermistor is raised.

.....

.....

.....

..... [3]

(ii) The voltmeter reads 3.6 V when the temperature of the thermistor is 19 °C.
Calculate the resistance of the thermistor at 19 °C.

resistance = ... Ω [4]

8 Thoron is a radioactive gas. The variation with time t of the detected count rate C from a sample of the gas is shown in Fig. 8.1.

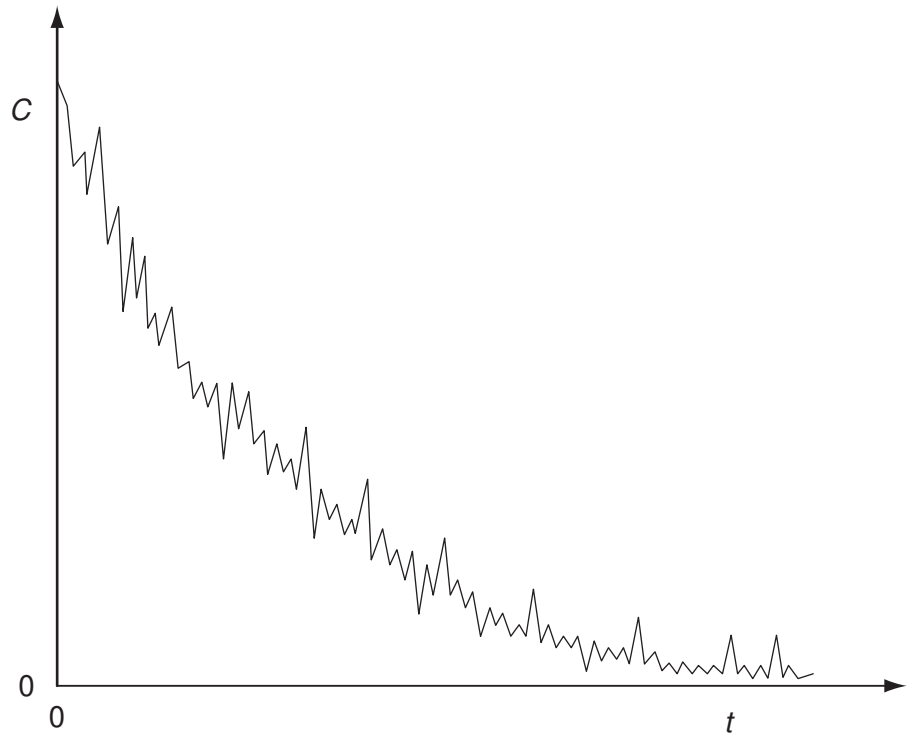

Fig. 8.1

Radioactive decay is said to be a random and spontaneous process.

(a) Explain, by reference to radioactive decay, what is meant by a *random* process.

.....

.....

..... [2]

(b) State the feature of Fig. 8.1 which indicates that the process is

(i) a decay process,

..... [1]

(ii) random.

..... [1]

© UCLES 2008

(c) A second similar sample of thoron is prepared but it is at a much higher temperature. The variation with time of the count rate for this second sample is determined.
State the feature of the decay curves for the two samples that suggests that radioactive decay is a spontaneous process.

.....

..... [1]

© UCLES 2008

BLANK PAGE

BLANK PAGE

BLANK PAGE

Permission to reproduce items where third-party owned material protected by copyright is included has been sought and cleared where possible. Every reasonable effort has been made by the publisher (UCLES) to trace copyright holders, but if any items requiring clearance have unwittingly been included, the publisher will be pleased to make amends at the earliest possible opportunity.

University of Cambridge International Examinations is part of the Cambridge Assessment Group. Cambridge Assessment is the brand name of University of Cambridge Local Examinations Syndicate (UCLES), which is itself a department of the University of Cambridge.